Specification/ Order Sheet

© 2026. www.gctfabricators.co.za.
All rights reserved.

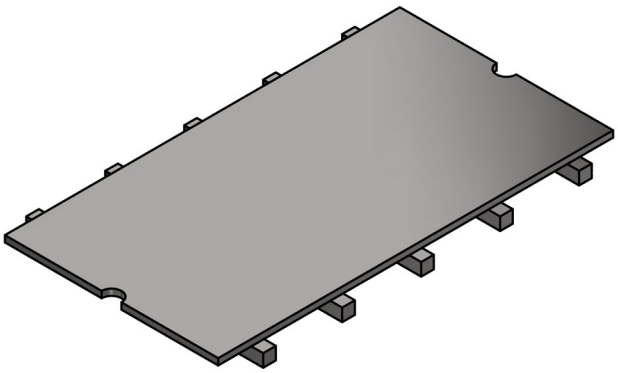

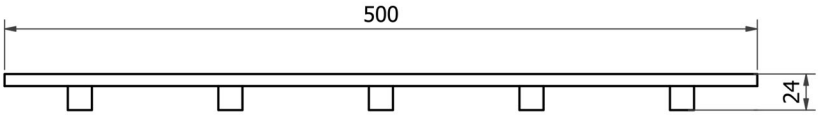

GCT M125-GM GRATING
SKU:139-001-A000

Stainless steel solid grating for use
with GCT-IND FC and FCM box channels.
Designed with a smooth surface enabling wheels
under heavy loads, to move freely without causing
damage to the grate or the tires.

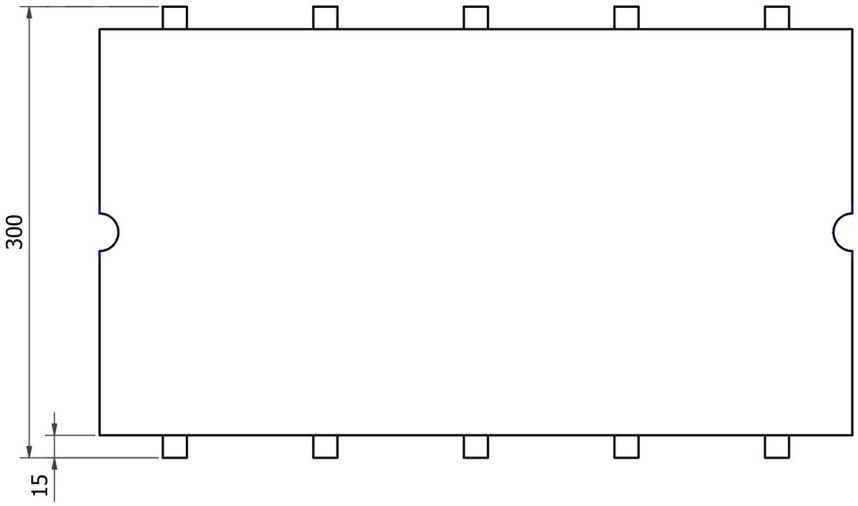

Specification
Standard (RSA): SANS 51253-1
Standard (EN): EN 1253-1
Material (EN): 1.4301 (304) or 1.4404 (316)
Surface finish: Pickled and passivated, polished
Compatible with: GCT-IND FC & FCM Box Channels
Non-slip: No
Load class: M125 (12500KG)
Minimum height (mm): 24
Overall dimensions (mm): 500 l X 300 w X 24 h
Weight (kg): 11.7

Order Sheet:
Please mark option/s in each box with an X. * (asterisk) indicates special order. If no options are selected the product is supplied as standard.

MATERIAL
select one ***X***
☐ 304
☐ 316*

Qty:	Name:	Signature:	Date:	Company:	PO no: